Patient Lifter RPM29001

Instruction Guide

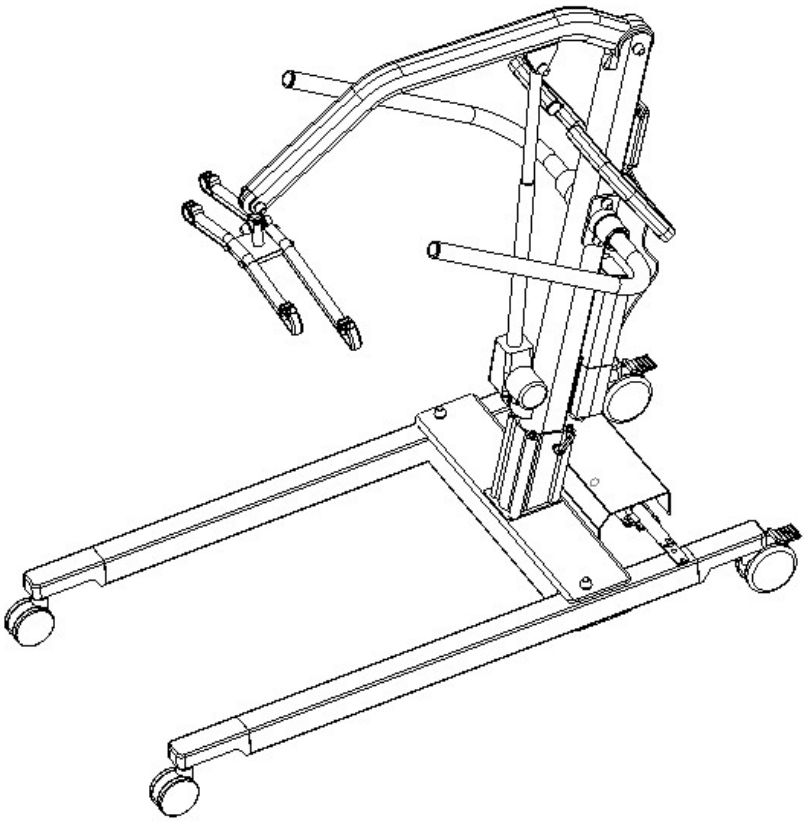

R.POON MEDICAL PRODUCTS(Mingguang) CO., LTD

No.116 Qicang Road,Mingguang, Anhui, China.

Tel: 86-0550-8108866

Fax: 86-0550-8106688

E-mail : uniforce@r-poonmedical.com

Contents

Product Description

The Patient Lifters are electrically-powered mobile lifts, designed to be used in most of the common lifting situations, for example transfers between bed and wheelchair, to and from the toilet and bathtub or for lifting to and from the floor. Selecting the appropriate slings and accessories for each individual is important to assure maximum function and safety when using a patient lift.

The Lifter can be adjusted to three different heights to give the most appropriate lifting range. The mid-range is the standard position, while the lower position may be the most suitable for lifting children, or to/from the floor. The upper position may be needed for higher lifts, for example to beds and gurneys that cannot be lowered.

In this document, the person being lifted is referred to as the “patient” and the person helping them is referred to as the “caregiver”.

△ is a warning triangle used to warn of situations that demand extra care and attention.

△ **IMPORTANT!**

Carefully read these instructions and the instructions for the particular lifting accessory being used. Lifting and transferring a person always present a potential risk. It is essential to thoroughly understand the contents of this instruction guide. Only trained personnel should use the equipment. If you have questions, please contact Uniforce.
or your local Uniforce representative.

△NOTE!

This instruction guide contains information that is important for users of the product. A complete understanding of the contents of the instruction guide is essential, and only personnel who are well informed should use the equipment. Remember to keep the instruction guide readily accessible for users of the product.

Safety Instructions

The lifespan of the Lifter is about 5 years.

Before using the lifter, make certain that:

• the lift is assembled according to the instructions
• lifting equipments are correctly applied to the lift
• the batteries have been charged for at least 6 hours
• you have read and understood the instruction guides for the lift and lifting accessories
• Personnel using the equipment have received appropriate instructions and training

Before lifting, always make certain that:

• you have selected the correct type, size, material, and design of slings and accessories to safely meet the patient's needs.
• the lifting accessories are not damaged
• the lifting accessory is correctly and securely applied to the patient, so that no personal injury can occur
• the lifting accessory is correctly applied to the lifting equipment
• the sling's strap loops are correctly attached to the slingbar hooks when the sling strap is extended, but before the patient is lifted from the underlying surface.

△ Only one person can control the lifter. Never leave a patient unattended in a lifting situation!

CE

Particular care must be taken when using strong sources of potential disturbance, such as diathermy, etc, so that cables are not positioned on or near the lift. If you have questions, please consult the responsible assistive-device technician or the supplier.

Equipment is not suitable for use in the presence of flammable mixtures.

Maximum Load RPM29001: 320 kg (705 lbs.)

Definitions

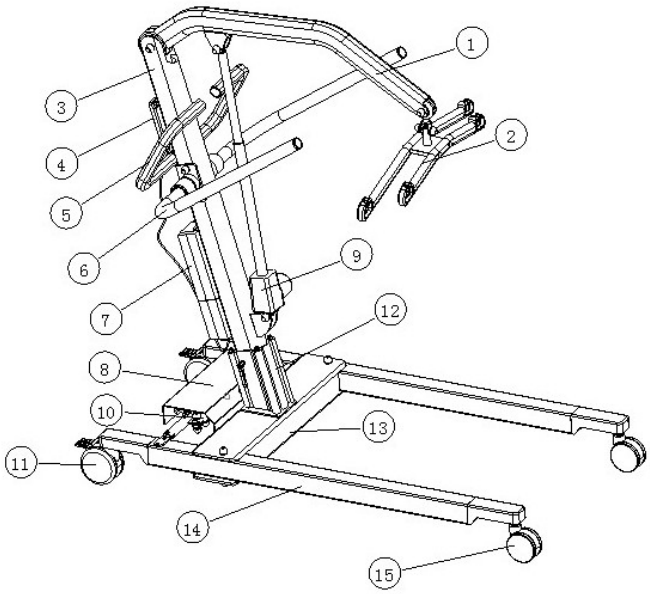

1. Lift arm
2. Sling bar
3. Lift mast
4. Hand control
5. hand grip
6. handrail（only for RPM29001）
7. Control box
8. motor cover
9. Motor for lift arm
10. Motor for base-width adjustment
11. 5″wheels with brake
12. Bottom supporting tube
13. Base tube
14. Base
15. 4″wheels without brake

Technical Data

Lifting speed: 7 mm/s without load

Batteries: 2 pcs. 12 V 2.9 Ah valve-regulated lead-acid gel-type batteries. New batteries available from supplier.

Battery charger: Built-in charger, 100-240 V AC, 50-60 Hz, max. 400 mA.

Motor (mast): 24 V, 10 A, permanent magnetic motor with mechanical safety mechanism, safety nut and outer tube.

Motor (Base): 24 V, 2.8 A, permanent magnetic motor.

Wheels: Front: 102 mm.
Rear: 127 mm wheel with brake.

Material: Painted aluminum with lacquer top coat.

Emergency lowering: Mechanical and electrical.

Intermittent operation: nt. Op 10/90, active operation max 2 min. Out of a time of 100, active must be less than 10, though not more than 2 min.

Degree of protection: IP X6

Sound level: ≦55 dB

Built for indoor operation.

Type B applied part

Class II equipment.

Measurements

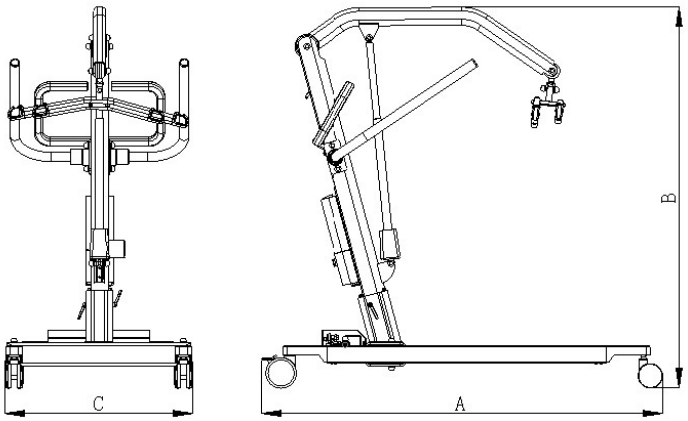

Model	Overall length	Highest Adjustment	Width Adjustable	Weight Capacity	Net Weight
RPM29001	1615 mm	710-1980（mm）	735-960（mm）	320 kg	65 kg

- These measures depend in which hole the mast is levelled a secured. See Assembly page 7. These measures hold for the use of the standard slingbar. The change or complementary addition of other lifting accessories result in a change of the lifting height.

Key dimensions of mobile hoist

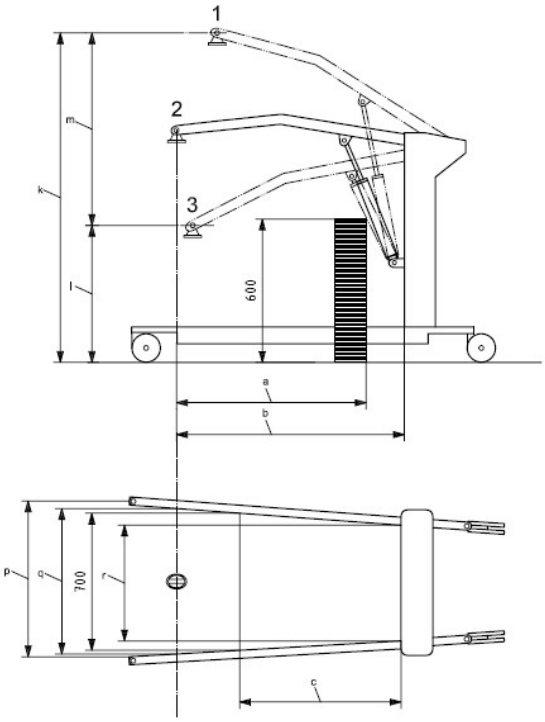

Key: **1** highest position，**2** maximum reach position，**3** lowest position，
a Maximum reach at 600 mm (reference height)，**b** Maximum reach from base，
c Reach from base with legs spread to 700 mm，**k** Maximum height of CSP，
l Minimum height of CSP，m Hoisting range，**p** Maximum internal width，**q** Internal width at maximum reach，
r Minimum internal width.

Model	a	b	c	k	I	p	q	r
RPM29001	815mm	825mm	290mm	1980mm	710mm	960mm	770mm	735mm

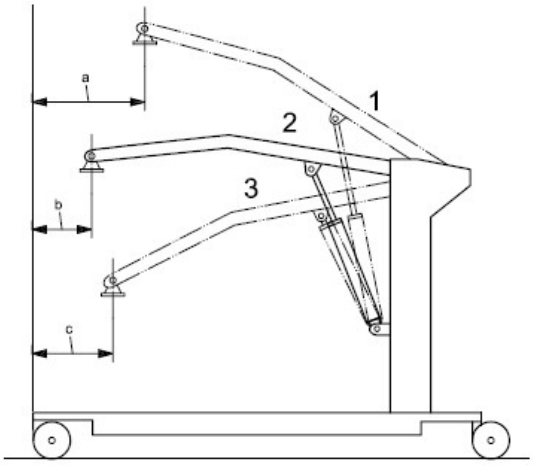

Key：**1** highest position，**2** mid position，**3** lowest position
a Minimum distance from wall to CSP at maximum height (legs spread).
b Minimum distance from wall to CSP at maximum reach (legs spread).
c Minimum distance from wall to CSP at minimum height (legs spread).

Model	a	b	c
RPM29001	610mm	325mm	560mm

Base height/clearance

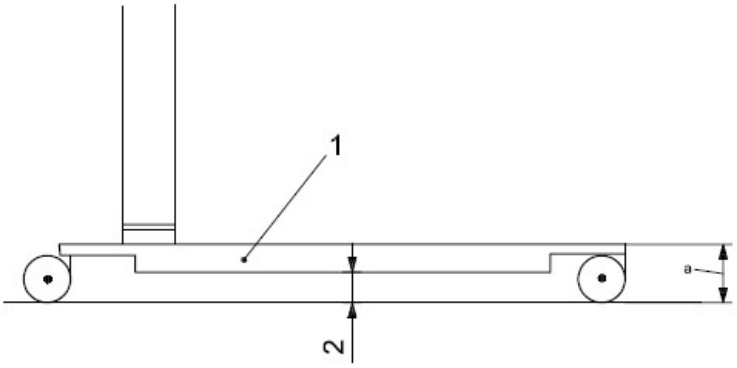

Key：**1** base，**2** clearance，**a** Base height

Model	2	a
RPM29001	100mm	170mm

The moving force of the lifter is as follow:

Model	Starting		Driving	
	Pushing	Pulling	Pushing	Pulling
RPM29001	119N	125N	60N	61N

Assembly

Before assembly, make sure you have the following parts:

- Lift mast with lift arm, control box, motor for lift arm, flexlink, locking handles and slingbar
- Base
- Lever for base width adjustment
- Handcontrol with cable
- Battery box and holder for cable
- Bag containing Instruction Guide, Quick Reference Guide, cable for charging, extension cable for charging.

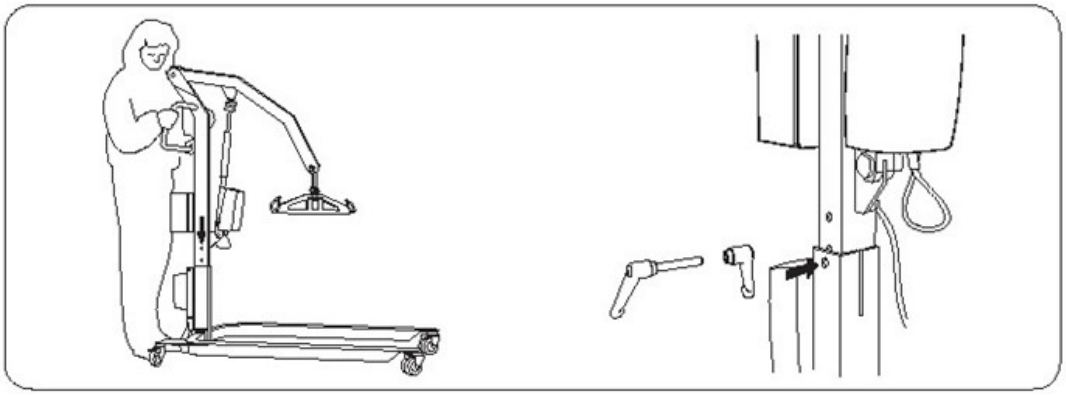

1. Remove the locking handles from the base and place the lift mast in the socket on the base.
2. Then plug the stop handle alignment hole in the lift mast.

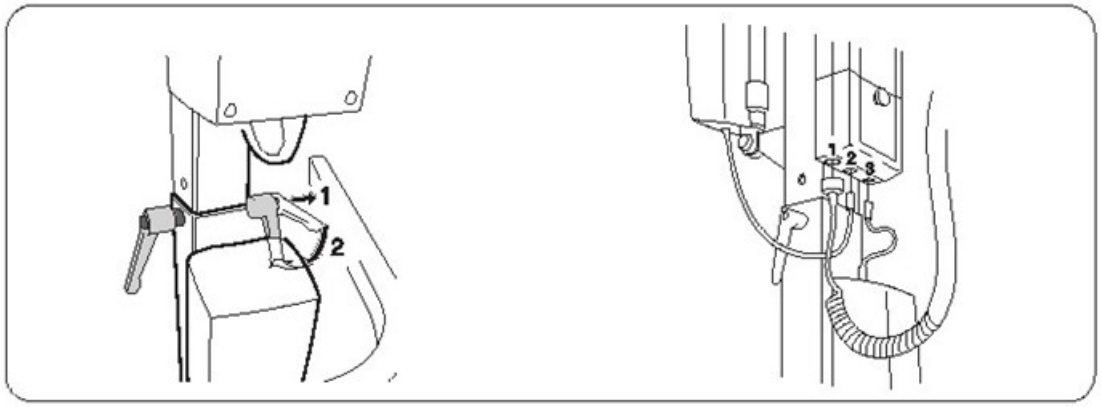

3. Secure the mast in the desired position in the base with the accompanying locking handles. Adjust the handles so they are vertically aligned (pointing down).
4. Connect cables as follows:
   - Cable hand control to outlet 1.
   - Cable motor for lift arm to outlet 2.
   - Cable Motor for base-width adjustment to outlet 3

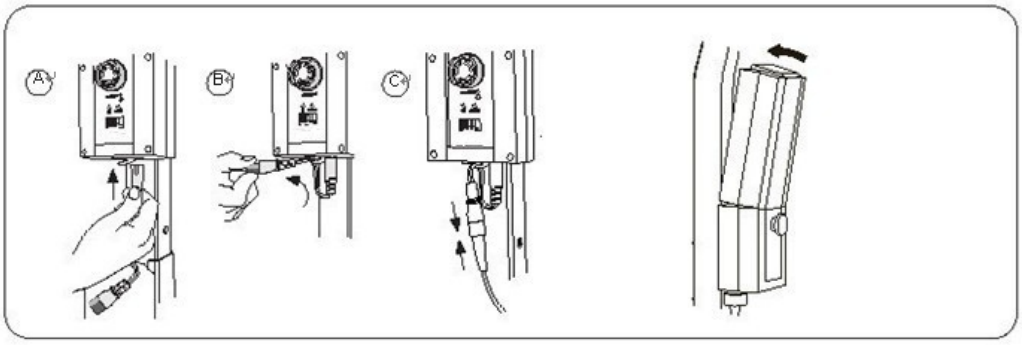

5. A) Connect the extension cable for the charging cable to the control box.
   B) Insert the extension cable in the tension clip underneath the control box.
   C) Connect the charging cable to the extension cable.

6. Place the removable battery box into position on top of the control box. Check that the battery box is locked to the assembling part (a 'click' will be heard).

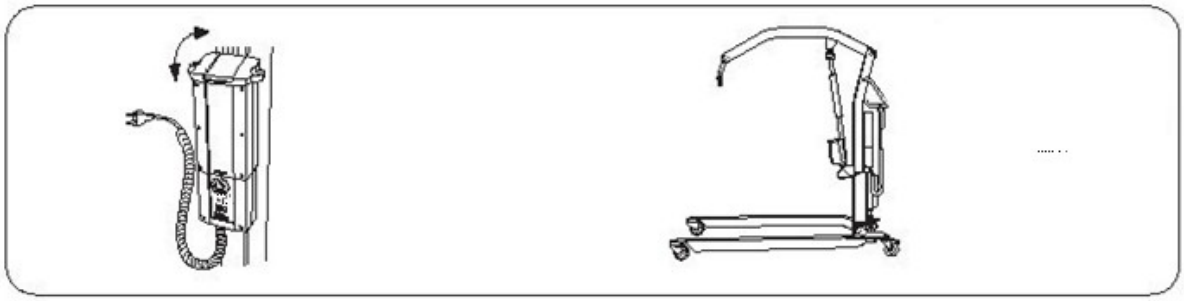

7. Mount the holder for the charging cable. Hook it on the outer edge and press down until you hear a 'click'.

8. The Quick Reference Guide please read the signs on the mast.

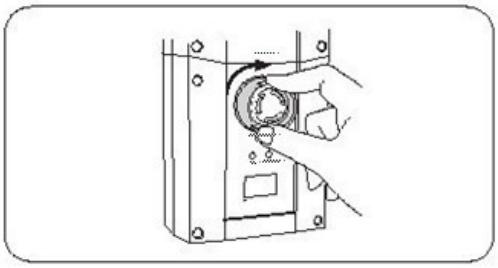

9. Reset the emergency stop by turning the button in the direction indicated by the arrows.

After assembling, check to ensure that:

- the lifting motion correspond with the buttons on the hand control
- emergency lowering functions properly
- the width adjustment of the base functions
- wheel brakes work properly
- the indicator lamps on the front of the control box lights when charging.

User´s Guide Battery Capacity

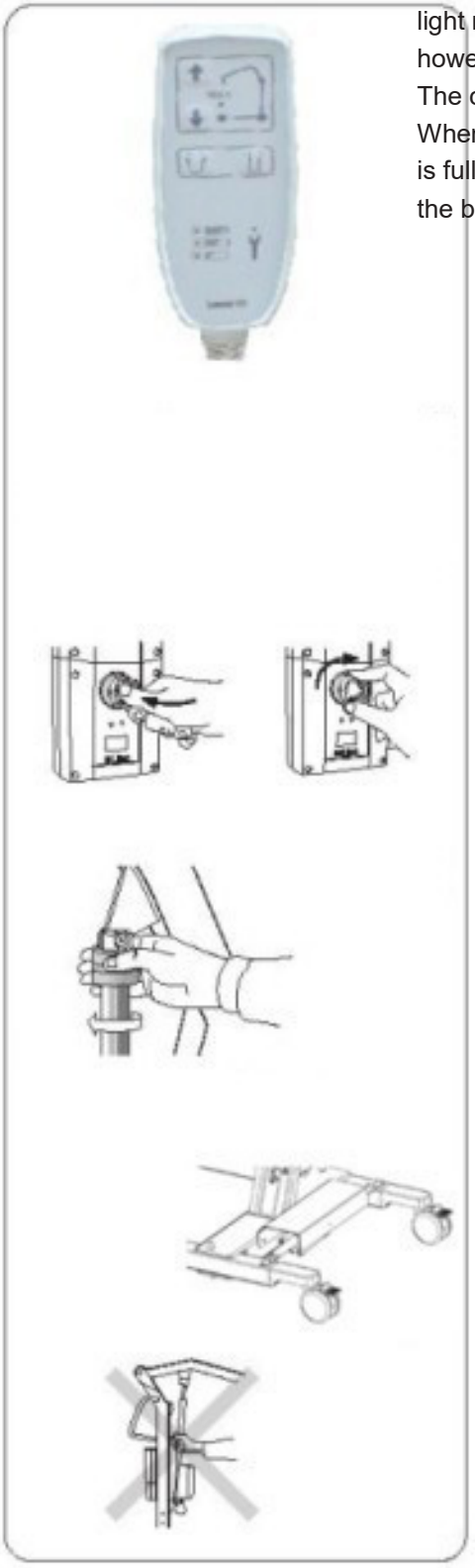

If the battery needs charging the lamp of the hand control bottom will light red. When this occurs the battery needs to be charged. There is however enough power left in the battery for a few more lifts.
The control box has a display to show the current battery capacity.
When all fields of the battery shape display are light, the battery is fully charged. When the battery shape shows red and keeps flashing, the battery must be re-charged immediately.

Operation

Operate the lift using the push-buttons on the hand control.

For raising and lowering the lift arm:

Press ⬆ and ⬇ respectively.

The direction in which the arrows are pointing applies when the hand control is held as shown in the picture.

Lifting motions stops as soon as the push-button is released.

For base width adjustment:

Press either of the two push-buttons.

Wider

Narrower

Emergency Stop

Activate:

Push the red Emergency Stop button on the control box.

Reset: Turn the button in the direction of the arrows.

Mechanical Emergency Lowering

Mechanical emergency lowering is performed by turning the red emergency-lowering cylinder in the direction of the arrows.

Locking the wheels

The rear wheels can be locked for rotation and lateral movement. To lock the wheels press the brake lever above the wheel down with your foot. Release the wheels by pressing the top side of the lever. During lifting, wheels should remain unlocked so that the lift may shift to the patient's center of gravity. The wheels should however be locked if there is a risk for the lift moving into the patient, for example when lifting from the floor.

△Locked wheels during lifting increases the risk of the lift tilting over.

△Never move the lift by pulling the actuator!

For maximum battery life, batteries must be charged regularly.
We recommend charging after use or each night.
Maximum charge is reached after about 6 hours. When the batteries are fully charged, the charger disconnects automatically.
NOTE! A yellow indicator lamp on the control box lights constantly during charging. When the batteries are fully charged, the yellow lamp shuts off.
If this lamp continues to light after 8 hours, the batteries probably need to be replaced.
Discontinue charging and replace batteries.
Never charge batteries in a wet area!
If the lift is not in daily use, we recommend that the emergency stop be pressed in after the lift has been used. This breaks the current and conserves battery power. Make sure the lift is fully charged before pressing in the emergency stop.

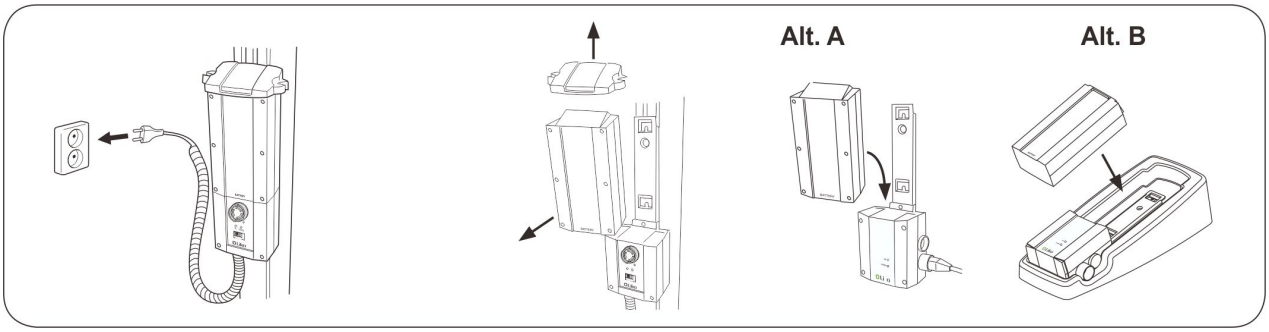

With built-in charger:

Plug the charger cable into a wall socket (100-240 V AC). Check that both lamps on the control box light. The yellow lamp on the control box indicates charging and the green lamp indicates electricity to the charger.

If the charger cable is stretched out it should be replaced to avoid the risk of the cable getting caught and tear.

With wallmounted charger or table charger housing:

Loosen the holder for the charger cable. Remove the battery box from the control box by loosening the locking device on top of the battery box.

Alt. A. Place the battery box on the wallmounted charger. Plug the charger cable into a wall socket (100-240 V AC). Check that both lamps on the control box light. The yellow lamp on the control box indicates charging and the green lamp indicates electricity to the charger.

Alt. B. Place the battery box on the charger in the table charger housing. Plug the charger cable into a wall socket (100-240 V AC). Check that both lamps on the control box light. The yellow lamp on the control box indicates charging and the green lamp indicates electricity to the charger.

Note! The lift does not operate when the charger cable is plugged into a wall socket.

Old batteries are to be left at the nearest recycling station or given to personnel authorized by Uniforce.

Maximum Load

Different maximum allowable loads may apply to different products on the assembled lift system: lift, slingbar, sling and other accessories. For the total lift system, the lowest max. allowable load indicated for the respective products on the system always applies. For example: The transfer that is approved for 175 kg (385 lbs.) may be equipped with a slingbar that is approved for 300 kg (660 lbs.). In this case, the applicable max. load is 175 kg (385 lbs.) for the total lift system. Study the marking of the lift and the accessory or contact your Uniforce representative.

Lifting Accessories

△ Using other lifting accessories than those recommended below may induce a risk.

Changing slingbars and adding extra accessories affects the maximum lifting height of the lift. Before changing slingbars and accessories, it is important to ensure that it will still be possible to achieve the desired lifting height for situations in which the lift will be used.

For choice of appropriate slings and other lifting accessories, see e.g., the brochure “Lifting accessories”. For further guidance on choosing a sling, consult the instruction guide for the respective sling model. Here, you will find advice on suitable combinations of Uniforce slingbars and Uniforce slings.

Contact your Uniforce representative or visit www.r-poonmedical.com for advice and information on Uniforce’s product range.

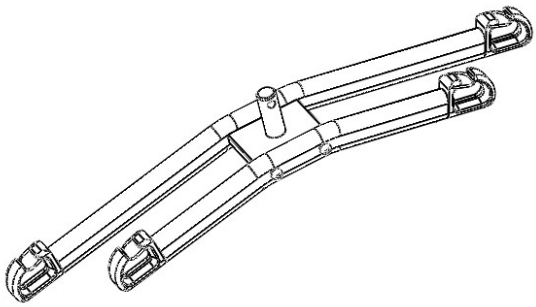

Battery charger
For wallmounting or for use with the table charger housing

Extra battery

Table charger housing
excl. charger and battery

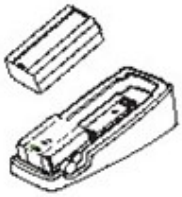

Simple Troubleshooting

The lift does not work up/down. Width adjustment does not work in/out.	1. Check that the emergency stop button is not pushed in (p. 9). 2. Check that the cables to the control box are connected correctly (p. 7). 3. Check that the charging cable is not connected to a wall socket. 4. Check that the battery is charged (p. 10). 5. Check that the contact plate of the battery box is not defective or broken off. 6. If the lift still does not work satisfactorily, Contact Uniforce.
Battery charging does not work.	1. Check that the emergency stop button is not pushed in (p. 9). 2. Check that the contact plate of the battery box is not defective or broken off. 3. If the lift still does not work satisfactorily, contact Uniforce.
The lift stops in the elevated position.	1. Check that the emergency stop button is not pushed in (p. 9). 3. Use the electrical emergency lowering device to safely lower the patient (p. 9). 4. Use the mechanical emergency lowering device to safety lower the patient (p. 9). 4. Check that the battery is charged (p. 10). 5. If the lift still does not work satisfactorily, contact Uniforce.
If you hear unusual sounds	Contact Uniforce.

Care and Maintenance

Care and inspection

For safe and trouble-free operation, a few routine procedures should be performed every day the lift is used.

• Visually inspect the patient lift and check for external damage or wear.
• Check that all screws and lock nuts on the slingbar are tight.
• Check that the safety latches on the slingbar work properly.
• Check the handcontrol and the lift and width movements.
• Check the emergency lowering function (both electrical and mechanical).
• Charge the battery every day the lift is used, and check charger function.

When necessary, clean the lift with common surface cleaners or disinfectants and check to ensure that the wheels are free of dirt and hair.

NOTE! Do not use cleaning agents that contain phenol or chlorine, since these can damage aluminium and polyamide aterial.

△ The lift should not be exposed to running water.

Service

The lifter must be inspected at least once per year. Pay particular attention to parts that are subject to wear.

△ Repairs and maintenance may only be carried out according to Uniforce service manual, by personnel authorized by Uniforce and using original Uniforce spare parts.

Service agreements

Uniforce invites you to sign a service agreement for regular maintenance and testing of your Uniforce product.

Transportation and storage

During transportation, or when the patient lift is not to be used for some time, the emergency stop button should be pushed in. The environment where the patient lift is transported and stored should have a temperature between 10 ˚C and 40 ˚C and a humidity between 30 % and 75 %. The air pressure should be between 700 and 1060 hPa.

Recycling

For instructions on how your Uniforce product should be recycled, please visit our website www.r-poondedical.com.

Product changes

Uniforce 's products are constantly being updated and refined. Uniforce reserves the right to change aspects of the products without prior notice. Contact your local Uniforce representative for updated information and advice. Uniforce is quality certified according to ISO 9001 and its equivalence for the medical device industry, ISO 13485.